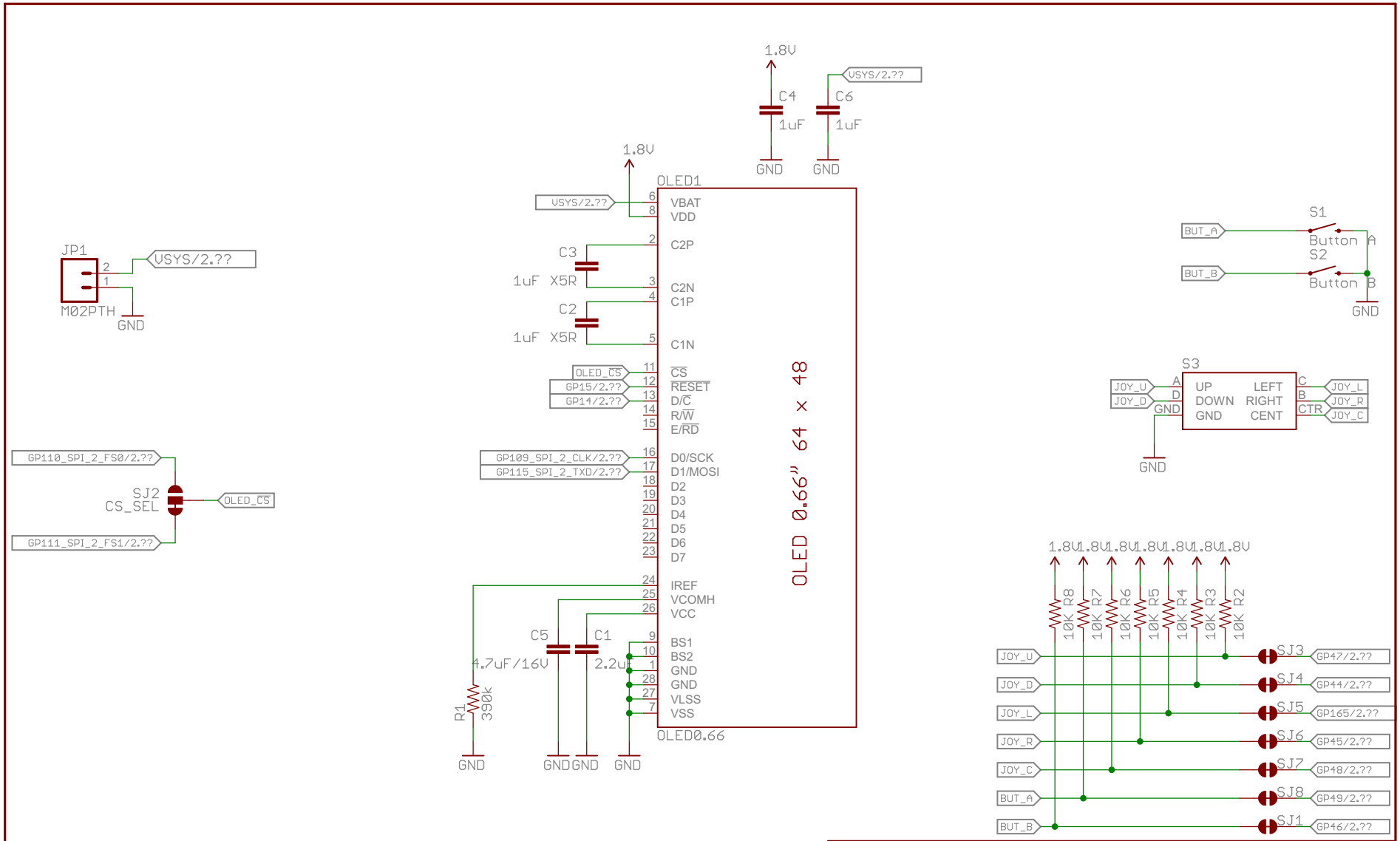

open hardware

Released under the Creative Commons
Attribution Share-Alike 4.0 License
https://creativecommons.org/licenses/by-sa/4.0/

TITLE: oled_block

Design by:
Jim Lindblom

REV:
v10

Date: 10/23/2014 10:12:56 AM

Sheet: 1/2

EDISON

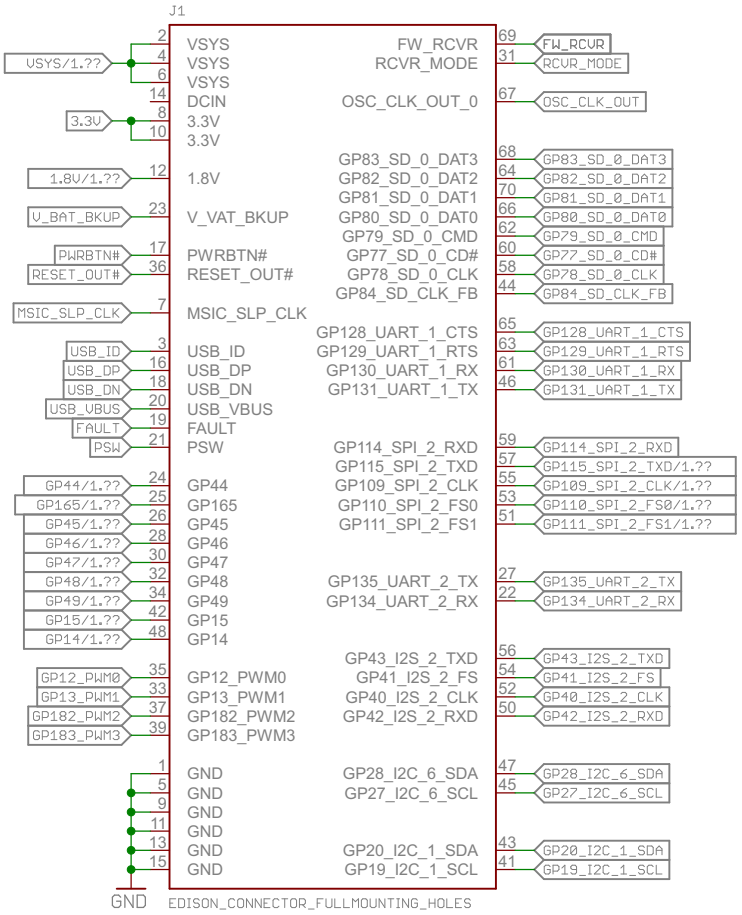

Released under the Creative Commons
Attribution Share-Alike 4.0 License
https://creativecommons.org/licenses/by-sa/4.0/

TITLE: oled_block

Design by:

REV:

Date: 10/23/2014 10:12:56 AM

Sheet: 2/2