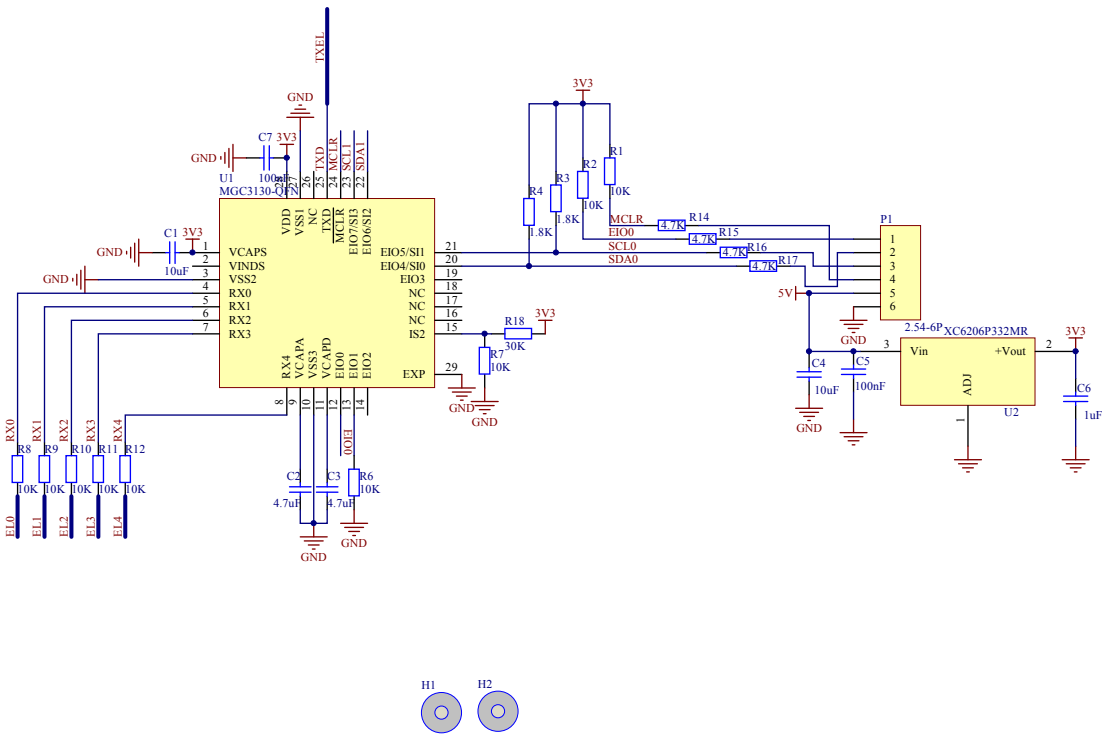

Title: *3D Gesture Sensor-mini*			SKU: SEN0202
Drawn: CD	Revision: V1.0		Size: A3
Page: X of Y	Date: 2016/1/25		Time: 11:02:10