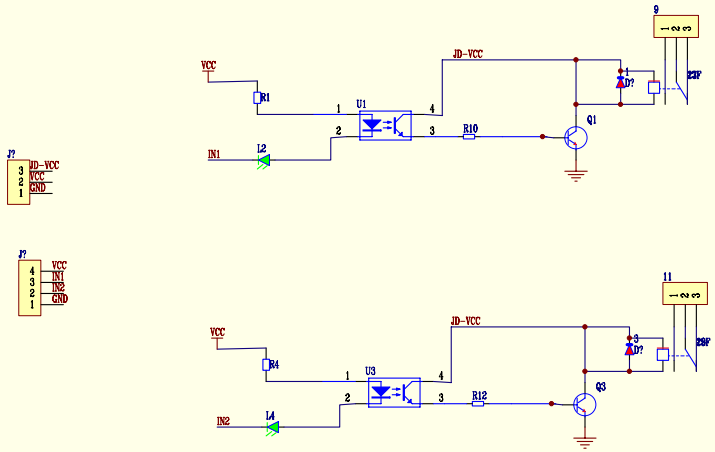

Title		
Size A3	Number	Revision
Date: 29-Nov-2011	Sheet of	
File: C:\PROGRAM FILES\DESIGN EXPLORER 99 SP[illegible]\2[illegible]~1.DDB		